BUFFER MANAGEMENT FOR AUTOMATED MATERIAL HANDLING SYSTEMS IN SEMICONDUCTOR INDUSTRIES

Christian Fischmann, Fabian Böttinger, Roland Wertz and Christian Kunz
Department of Ultraclean Technology and Micromanufacturing
Fraunhofer Institute Manufacturing Engineering and Automation (IPA)
Stuttgart, Germany
E-mail: fischmann@ipa.fraunhofer.de

KEYWORDS
Discrete Event Modeling and Simulation in Logistics, Transport and Supply Chains

ABSTRACT

The automated material handling system (AMHS) is a highly automated transport solution of actual 300mm semiconductor waferfabs. The big logistic challenge in such a running system is the just-in-time delivery of lots (carriers). Therefore, beside tracks and vehicles, there are different storages (stocker) and buffers (under track storages and load ports) integrated in such a transport system. To conquer the logistic challenge, an optimum allocation and control strategy for all storage equipment is required. This paper describes the investigation of different storage and buffer strategies based on detailed simulation models of a dedicated semiconductor factory area.

INTRODUCTION

At present the most expensive investment costs of a waferfab is the process equipment. Therefore, the crucial key performance indicator of the process and automation engineers is the equipment utilization (Sokhan-Sanj et al. 1999). To achieve this objective, each wafer carrier (lot) has to be in the right place at the right time. Therefore an effective use of the extensive material transport systems with a dynamic storage component control is obligatory. The storage components in an AMHS are segregated to:

- Load ports,
- Stockers and
- Under-track-storages (UTS).

The primary buffer is the tool load port (LP), directly connected with the process equipment and mostly limited to 3 or 4 ports. To overcome this limitation, other buffers or storages are essential. One possible alternative can be a stocker. A Stocker is an automated high-rack storage area with manual and automated in- and output ports and conveyors. Once the carrier is inside the stocker a robot is handling it into a shelf (rack bin location). To minimize the needed cleanroom footprint, the height of the stockers is often increased to the maximum possible height. (Csatáry 2002) Beside the footprint, the stockers have another significant disadvantage. The dedicated stocker is usually far away from the process equipment, where the lot is needed. This might lead to very long delivery times (DT) and as result to a drop in the equipment utilization (Hunter and Humphreys 2003). Additionally, stockers need valuable clean room area on the factory floor.

In order to resolve the specified disadvantages, so called under-track-storages (UTS) were developed. These UTS are single buffer storages, mounted over the head, under the rail-system, Fig. 1.

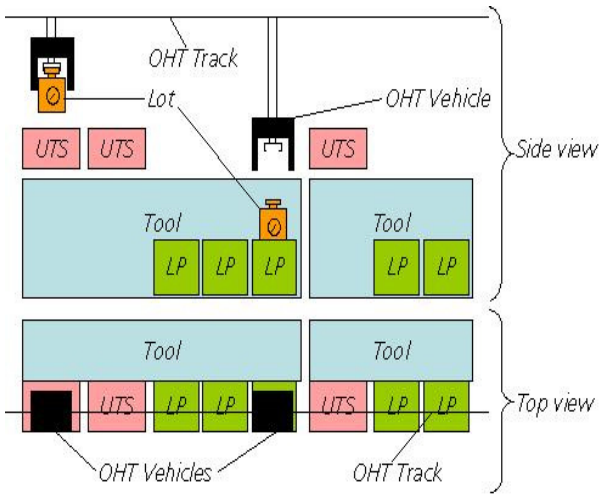

Figures 1: Example of UTS position

As the name already implies, UTS require no place on the ground of a waferfab. Furthermore the UTS are passive shelves with a lower cost of ownership due to reduced capital cost, increased reliability and elimination of scheduled maintenance in comparison to stockers (Antwerp 2004). Based on this information, the idea of the authors was to design a simulation model with fewer or no stocker transports, but with a lot of buffer application on base of UTS.

This paper presents a detailed simulation model of a dedicated waferfab area using aggregated process flow data. With this simulation model it is possible to:

- Execute different storage strategies in a short time due to small changes in a variable, adaptive source code
- Investigate probable efficient UTS placements
- Analyze possible control methodologies of the UTS allocation

Proceedings 22nd European Conference on Modelling and Simulation ©ECMS Loucas S. Louca, Yiorgos Chrysanthou, Zuzana Oplatková, Khalid Al-Begain (Editors)
ISBN: 978-0-9553018-5-8 / ISBN: 978-0-9553018-6-5 (CD)

The following section gives an overview of the basic data and describes the architecture of the fully integrated model. Section 3 explains the setup of system control. In section 4, the result with an optimized UTS allocation strategy is presented. Finally, section 5, concludes with an executive summary.

BASIC DATA

The scenarios are simulated in Applied Materials AutoMod™ Version 12.0 on two different models. Both models are designed as unified track layout systems. That allows tool to tool moves and eliminates the need for stocker transfers to route carriers between loops.
As mentioned in the abstract the authors use a less detailed model of a fab-segment. For that reason a stationary input and output is selected. At the input lots are generated and sent into the system. From here the lots are picked up by vehicles and routed through the whole system, including several process steps. Finally they are brought to the output, where they are unloaded and virtually destroyed. By that input and output represent the interface to other fab segments that are usually present and interacting with this segment in real life fabs. The layout of the models is oriented on similar models of already existing waferfab-segments with a unified system including highways (also known as main tracks having no load ports) and bay architecture.

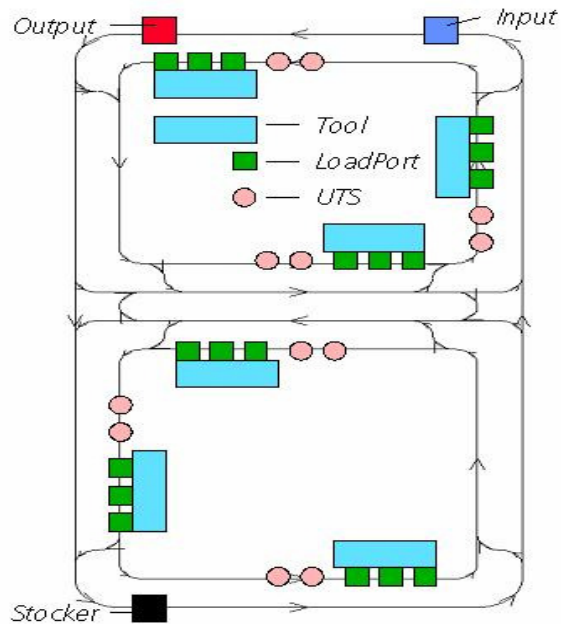

Figures 2: Exemplary extract of model 1

The first model has the UTS groups placed directly in front of the LPs as shown in Fig. 2. This model is used to analyze scenario 1, as it has a fixed allocation of ZFS groups to dedicated Tools.
In opposite to this, scenario 2 and 3 are evaluated on model 2 which has its UTS groups arranged on highways, see Fig. 3.

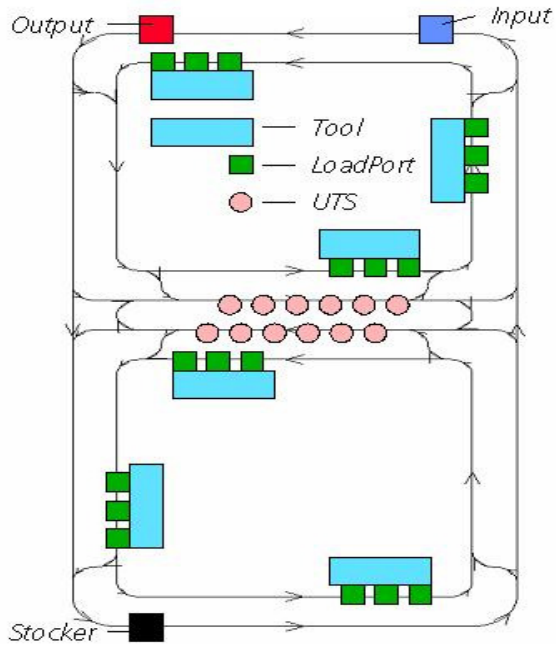

Figures 3: Exemplary extract of model 2

The only scenario including a stocker is scenario 4 which can run on both models. To be able to analyze the differences between UTS and Stocker based solutions, the UTS cannot be used as a storage facility in this case. The stocker is placed on the outer edge of the layout to simulate a longer travel distance to the process tools which accords to situations in reality.
In all scenarios 5 ToolGroups (TG) are represented, always based on the same basic data which is shown in Table 1.

Table 1: Basic data of all scenarios

TG	Tools	LPs	Process times / deviation [minutes]	Destination probabilities
1	5	3	8.9 / 2	100%
2	8	3	30 / 9	47%
3	2	2	4.6 / 0.4	66%
4	7	2	15 / 4	80%
5	6	2	10.5 / 3	100%

Destination probabilities represent the probability for one lot, to be transferred and processed at the corresponding ToolGroup. This approach simulates the existing variety in process plans and enhances model dynamics. Other basic data for all scenarios are:

- The start-cycle with 1.8 minutes per lot (Carrier) with a deviation of ±0.9 minutes.

• Each scenario includes 480 hours measurement 240h warm up and 240 hours in steady state
• 20 vehicles in use with 10 distributed parking positions
• 100% availability (no downtimes, no maintenances, no failures) of all transportation and process equipment
• One stocker

The difference between scenario 2 and 3 is the allocation of the UTS. Scenario 2 has the same allocation as scenario 1 which is dedicated to specific tools. In scenario 3 the UTS are located as in scenario 2 but are dedicated to the whole bay they are located in. This means that this UTS buffer can be used for any tools located in this bay.

Table 2: UTS capacity for each ToolGroup

TGs	# of UTS for Sc. 1 and 2	# of UTS for Sc. 3
1	20	80
2	24	92
3	12	34
4	28	74
5	24	80

SET UP OF SYSTEM CONTROL

All LPs, UTS and the output in the system are designed with a finite capacity of 1. In contrast to this the stocker is not limited in its capacity to be able to get a detailed view on the required capacities and to monitor the level of Work In Progress (WIP). At the input an unlimited queue is implemented in order to analyze the performance of the transport system in dependence of the scenario simulated. The process tools in the tool groups are equipped with one process chamber each, which allows the processing of one whole lot at the same time.

A lot is generated at the input. Depending on the probabilities given in the process flow the next tool group for this lot is selected. If there is a tool LP available in the selected tool group, it will be reserved and the lot will be delivered there. If there is no tool LP available an intermediate storage location has to be chosen. In scenario 1 to 3 a suitable UTS location is selected, if available. If there is no remaining space in the UTS – or in scenario 4 - the stocker is chosen. As soon as any tool is finished the next waiting lot is scheduled for this tool. This approach is based on a FIFO rule to ensure that no lots can be "forgotten" in any storage. The system is based on 20 Overhead Hoist Transport (OHT) vehicles which are located randomly in the layout at the beginning of each simulation run. As soon as there is an arising transport job the idle vehicle which is closest to the lot is dispatched to it.

If there is no vehicle available at this moment the transport job is queued in an infinite job list.

Vehicles that are not involved in any transportation task (deliver, retrieve or on its way to deliver or retrieve) are dispatched to any of the parking positions which are spread randomly in the layout.

Results

The overall performance of an AMHS can be evaluated by several metrics (Sturm et al. 2004).

On the one hand these metrics are time values like

- Average transport time (AvTT)
- Average delivery time (AvDT)
- Average waiting time for transport (AvWT).

These three time metrics are built up with several time stamps at each status change of the simulation. Fig. 4 shows how these times are calculated by means of status changes.

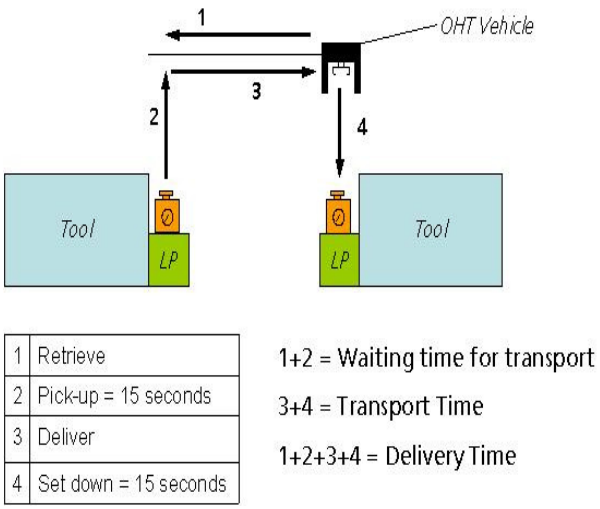

Figures 4: Time segments of move events

Within a simulation runtime of 480 hours (240 hours warm up and 240 hours results) these time segments are logged and analyzed. For the delivery time analysis of the AMHS only transport values by destination view are evaluated. Due to the necessarily high utilization of cost-intensive tools these transports need to be optimized. This means transports from tool to storage locations are not considered in the investigations.

On the other hand the performance metrics are capacity metrics like

- Vehicle utilization
- Stocker component utilization
- UTS utilisation
- System throughput MPH (moves per hour).

Basically, the vehicle utilization is divided into 4 statuses: "Deliver", "Retrieve", "Going to park" and "Idle". Based on project experiences at the Fraunhofer IPA the accumulated utilization percentage of "Deliver" and "Retrieve" should not exceed 65%. For all scenarios the average tool utilization is between 79% and 95%.

Results of Scenario 1

The throughput of scenario 1 results in 52950 moves in total with approximately 26% tool-to-tool (t-t) moves and 25% UTS-to-tool (u-t) moves. During the whole simulation run of this scenario there was no stocker move, which means the total storage is handled by UTS only. From all simulation runs, this scenario obtains the fastest average delivery time (69sec) for u-t moves, mainly caused by the short transport time of 18 seconds, see Fig. 5.

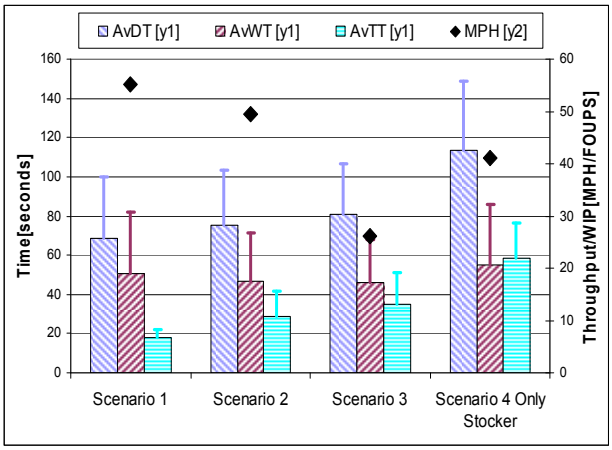

Figures 5: Delivery Time Analysis of all u-t (Sc. 1-3) and s-t (Sc. 4) moves

Nevertheless the impact on the delivery time performance of all moves is marginal (see Fig. 6), caused by the relatively long average delivery time of 97 seconds for t-t moves.

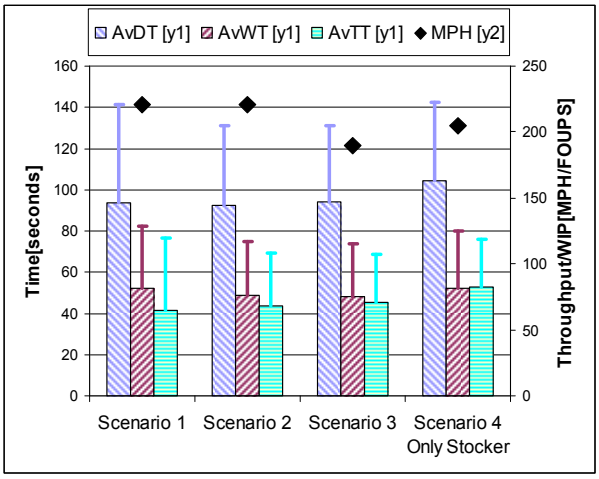

Figures 6: Delivery Time Analysis of all moves

It seems that the UTS bin positions directly in front of the tool LPs lead to a kind of "stop-and-go" behaviour of the vehicles on the track. Each time when a vehicle wants to travel to a LP behind an active UTS it has to wait for the whole hoist operation of the vehicle in front, which is currently picking up or setting down a load at the UTS. This results in the highest peaks for transport, waiting and delivery times of all scenarios except scenario 4. The vehicle utilization analysis of all scenarios shows a low utilization performance of less than 30% of delivering and retrieving statuses. However the number of OHT vehicles is not reduced to avoid the bottleneck on the vehicle side.

Results of Scenario 2

The second scenario results in 53047 moves after the warm up period with approximately 27% t-t moves, 22% u-t moves and about 3% stocker-to-UTS (s-u) moves. The reason for some lots moving to the stocker instead of tool or UTS is the bottleneck TG 2. However, this simulation run obtains with 92 seconds the fastest delivery times and the second fastest transport times (44sec) concerning all moves. This could be caused by stocker traffic which results in slightly less vehicle appearance within tool bays. This advantage in delivery times seems to be a disadvantage, resulting in more overall system traffic.

Results of Scenario 3

Scenario 3 obtains with 45583 moves the lowest throughput of all scenarios, based on only 14% u-t moves but 39% direct tool delivery (t-t moves). However, the analysis does not identify a bottleneck in the AMHS. The reason for this seems to be the different UTS allocation of this scenario. The high number of t-t moves indicates an improvement in traffic flow at tool LP as well as around the UTS.
For all moves, the average delivery time (94sec), average transport time (46sec) and average waiting time (48sec) is comparable with scenario 1 and 2. However, the simulation run obtains the longest delivery times, compared to the two other UTS scenarios for u-t moves. The reason seems to be the longer transport time of 35 seconds based on the changed UTS position in comparison to scenario 1 and the UTS allocation compared to scenario 2. The UTS allocation leads to a small increase of travel distances for the transport action due to the UTS group used by all tools within the bay.

Results of Scenario 4

The "only stocker" simulation, scenario 4, reached a throughput of 49232 moves with about 32% t-t moves and 20% s-t moves. Independent from the point of view (all moves or just the moves from tools as destination) the scenario needs the longest times of all scenarios. The reason could be found in the position of the stocker at the edge of the model. A closer look at the results shows a significant increase in delivering time by approximately 10% and the transport time by 20%. The reason for that are the higher times for the s-t moves in comparison to the u-t moves of the other scenarios, shown in Fig. 5. Surprisingly, the moves per hour are the second smallest of all scenarios.

Conclusion

Due to expensive investment costs of the process equipment in a waferfab, a just-in-time transportation of the process material is often the most relevant logistic key performance indicator. To achieve this indicator, not only an optimized transportation is necessary. Also the storage of the lots in a best possible solution is required. To investigate this challenge, the authors present a detailed simulation model of a typical waferfab area. Within this paper, different storage and allocation strategies are presented and analyzed by means of this simulation model.

The analysis of the different storage scenarios gives the impression that - for high throughput AMHS - buffers (like UTS) are definitely required. Nevertheless, to cover all storage peaks by UTS without any stocker seems unrealistic. The placement of UTS bins relies on availability of AMHS track area, vehicle traffic in front of tools or buffers and the process speed of the associate equipment. Additionally, the allocation of UTS-Groups for a dedicated area and not only single bins for each tool seems helpful for the system performance as well.

REFERENCES

Antwerp, K. V. 2004. "Automation in a Semiconductor Fab". *Semiconductor International*, 12/1/2004.

Csatáry, P. and K. Kümmerle. 2002. " 300mm Fab Conversions & the Chemispherical Challenge - a Model Case Study". In *Semiconductor FabTech 17th edition* 09/2002

Hunter, R. and C. Humphreys. 2003. "Trends in 300 mm Factory Automation". *Semiconductor International*, 6/1/2003.

Sokhan-Sanj, S.; G. Gaxiola; G. T. Mackulak; F.B. Malmgren. 1999. "A Comparison of the exponential and hyperexponential distributions for modeling move requests in a semiconductor fab". In *Proceedings of the 1999 Winter Simulation Conference* (Phoenix, AZ, Dec.5-8). IEEE, 774-778 vol.1.

Sturm R.; K. Redig; D. Glüer. 2004. "Robustness Evaluation and Improvement Method for Automated Material Handling Systems." *Semiconductor Fabtech, 21st Edition* Henley Publishing Ltd, London, 38-47.

AUTHOR BIOGRAPHIES

CHRISTIAN FISCHMANN is project manager and researcher at the department Ultraclean Technology and Micromanufacturing of the Fraunhofer Institute for Manufacturing Engineering and Automation, Stuttgart, Germany. His main field of work is the area of production logistics. He has been contributing to a number of international projects in semiconductor industry and to a growing number of projects in photovoltaic industry – successfully targeting challenges such as planning new production lines, developing, implementing and optimizing production logistic concepts and solutions.
His e-mail address is:
`fischmann@ipa.fraunhofer.de`.

FABIAN BÖTTINGER is project manager and researcher at the department Ultraclean Technology and Micromanufacturing of the Fraunhofer Institute for Manufacturing Engineering and Automation, Stuttgart, Germany. He is mainly involved in the area of production logistics and production IT. He has been contributing to a number of international projects in semiconductor as well as photovoltaic industry. In doing so, he successfully planed new production lines and made use of the tools of simulation for developing, implementing and optimizing production logistic concepts and solutions.
His e-mail address is:
`boettinger@ipa.fraunhofer.de`.

ROLAND WERTZ is project manager and researcher at the department Ultraclean Technology and Micromanufacturing of the Fraunhofer Institute for Manufacturing Engineering and Automation, Stuttgart, Germany. His field of work is the area of production concepts, particularly production logistics. He is involved in international projects in semiconductor and photovoltaic industry as well as in publicly funded projects. Thereby he is using simulation to plan new productions and to optimize already existing ones.
His e-mail address is:
`wertz@ipa.fraunhofer.de`.

CHRISTIAN KUNZ is studying production technology at the University of Applied Sciences, Dresden, Germany and was writing his seminar paper at the department Ultraclean Technology and Micromanufacturing of the Fraunhofer Institute for Manufacturing Engineering and Automation, Stuttgart, Germany. His task was to analyze the behavior of a simulated waferfab in regard to the location of buffers.